The curvature of the stylobate

Jacques Heyman

Choisy's first publication (1865), written when he was 24, was on the curvature of the stylobate. His *Études epigraphiques sur l'architecture grecque* appeared in 1883–84, and consisted of four specific studies —he did not write an extended account of Greek architecture comparable with his *L'art de bâtir chez les Romains* (1873), *L'art de bâtir chez le Byzantins* (1883) and *L'art de bâtir chez les Egyptiens* (1904). All of these are architectural treatises written by an engineer, and his structural analyses of Greek architecture may be found only in the comprehensive *Histoire de l'architecture* (1899) and in the commentary to his translation of Vitruvius (1909–10).

Vitruvius prescribes that the stylobate, the platform on which a Greek temple is constructed, should be domed, and he describes how this should be done with the use of *scamilli impares*. The passage, in Book III, Chapter 4, para 5 (i.e. III, 4, 5) reads:

> Stylobatam ita oportet exaequari, uti habeat per medium adjectionem per scamillos impares; si enim ad libellam divigitur, alveolatum oculo videbitur. Hoc autem, ut scamilli ad id convenientes fiant, item in extremo libro forma et demonstratio erit descripta.

and, in Morgan's (1914) translation:

> The level of the stylobate must be increased along the middle by the scamilli impares; for if it is laid perfectly level, it will look to the eye as though it were hollowed a little.

> At the end of the book a figure will be found, with a description showing how the scamilli may be made to suit this purpose.

Vitruvius clearly found it difficult to describe the technical procedure in words; unfortunately, no copy of the figure has survived. That stylobates (for example, that of the Parthenon) are indeed curved was confirmed only as late as the middle of the nineteenth century, and as Gros (1990) points out, the discussions as to the meaning of *scamillus* differ if they were written before or after this confirmation.

First, however, the nature of the curvature is not clear. The idea that the profile might be parabolic was put forward by Choisy (1909–10), and this is discussed in more detail below. The Parthenon (which will be used in this paper for numerical analysis) was constructed in the years 447–438 BC, whereas the discovery of conic sections is usually attributed to Menaechmus about 350 BC; it is possible that the Greek architects of the Parthenon (Ictinus and Callicrates) did not know of the parabola. Many commentators have assumed the curvature to be that of an arc of a vast circle —Dinsmoor ([1902] 1950) gives the radius as about 3 1/2 miles (cf the estimate of 5.5 km noted below). Alternatively, Robertson ([1929] 1943) states that the stylobate, although domed, is not really curved at all, but «consists of a series of straight lines, a portion of the circumference of a large irregular polygon».

Second, there has been debate as to the reason for the doming. Vitruvius is clear —it is to correct the optical illusion that would arise if the platform were to be constructed absolutely flat. Virtually all commentators accept this explanation (although most mention the obvious advantages of a sloping surface for the drainage of water, whether from rain or from the buckets of the cleaning ladies), and indeed Choisy expands on the technical aspects of this and other optical illusions in both his *Histoire* and in his commentary on Vitruvius.

Finally, the *scamilli* were certainly some part of a surveying process necessary to establish the curvature. The Latin s*camnum* means bench or stool, and *scamilli* are little stools; indeed Gros gives the translation *petites banquettes*. Thus the *scamilli* may be though of as thin blocks (or shims, or spacers, perhaps of wood), that is, as physical entities of various (i.e. *impares*, unequal) thicknesses. Alternatively, the meaning might be more abstract, and apply to a set of (unequal) numbers which define the departure of the stylobate from a plane surface. Choisy gives the translation *échelons à imparité*, which implies some sort of progressive sequence. It is perhaps relevant that the word 'bench' survives technically in English to refer to a level surface in masonry.

Figure 1
The curvature of the stylobate

Optical refinements

In the same Chapter 4 of Book III Vitruvius describes several other subtle refinements which are made in Greek architecture to counteract optical illusions, and some of these are of a different order of magnitude from the «massaging» of the stylobate. Dinsmoor gives the overall dimensions of the stylobate of the Parthenon to an accuracy which is not really credible: 228 ft 0 3/8 in by 100 ft 3 3/4 in (69.504 m by 30.880 m); that is, by implication, to the nearest 1/8 in (3mm). The differences in level between the centre and ends are 4 5/16 in and 2 3/8 in (109.5 mm and 60.3 mm) in the longitudinal and transverse directions. The departures from a plane surface amount therefore to one part in 500 or 600.

By contrast, the taper from base to capital of a Doric column should be, according to Vitruvius (III, 3, 11), about one sixth of the diameter in a height of ten diameters (the precise ratios depend on the precise column dimensions), that is, one part in 60; the slope of the face of a vertical column is 1/120.

Immediately after this prescription, Vitruvius notes in III, 3, 12 the swelling in the lengths of columns («which among the Greeks is called entasis»), and he appended a figure and calculation; as for the *scamilli*, this illustration has not survived. The entasis of the columns «was worked in order to correct the optical illusion of concavity which might have resulted if the sides had been straight» (Dinsmoor). This coincides exactly with Vitruvius's view of the curvature of the stylobate, and measurements of existing columns confirm that the optical correction is of the same order; for the columns of the Parthenon the swelling is about 20 mm in a height of about 10 m, or one part in 500.

Another visual correction is required for the columns at the four corners of a temple, «because they are sharply outlined by the unobstructed air around them, and seem to the beholder more slender than they are». Vitruvius states (III, 3, 11) that these columns should have their diameters increased by one fiftieth.

In III, 5, 4 Vitruvius states that the columns of the front and rear porticos should have their axes vertical, but that the corner columns, and all those which

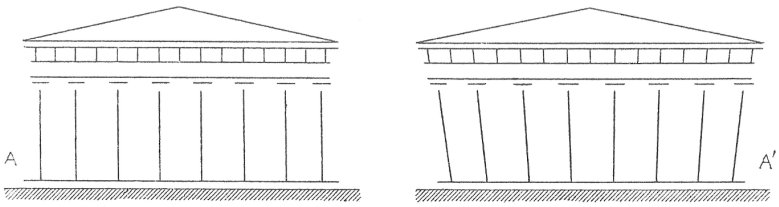

Figure 2
Optical distortions (Choisy 1899)

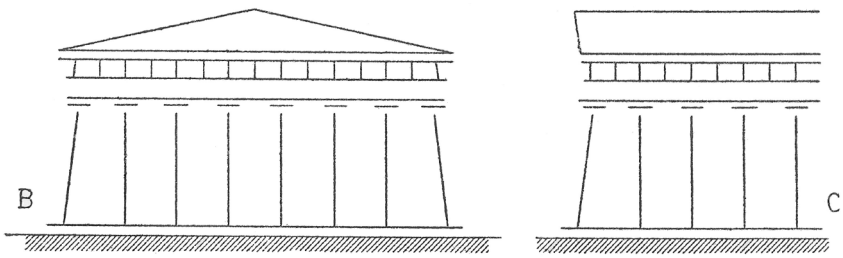

Figure 3
Constructional corrections (Choisy 1899)

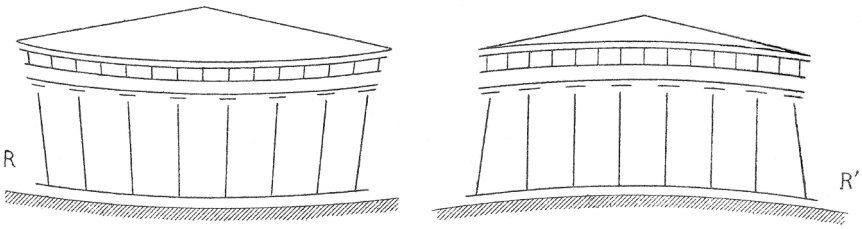

Figure 4
From Choisy 1899

run down the two sides of the temple should be inclined inwards to an angle such that it is the inner faces of these (tapered) columns which are vertical. In his *Histoire* Choisy discusses this matter. Figure 2 shows on the left a temple built with vertical columns, and he states that the columns would seem to the viewer to diverge in a fan (*en éventail*) as sketched on the right hand figure. The Greek «correction» is sketched by Choisy in figure 3, and more realistically in figure 4, where the stylobate is now curved (all «abnormalities» shown much exaggerated). Figures 5 and 6 (from Choisy's *Vitruve*) illustrate these refinements of construction, whose effects would seem to be largely independent of the position of the observer. Another geometrical correction recommended by Vitruvius is designed to counteract an illusion which would present to someone close to the temple front. Vitruvius refers (III, 5, 13) to the triangular pediment above the columns on the façade of the temple; if this were vertical, it would appear to the eye to recede, and hence should be inclined forward by a slope of one part in twelve. Choisy shows the sloping pediment in the right hand sketch in figure 3.

The *scamilli impares*

The Latin *impar* can mean unequal, or it can denote an odd number (cf the French *impair*. Both Cloisy and Gros use the spelling *inpar* in the presentations of the Latin text, but Choisy uses the less pedantic *impar* in his commentary).

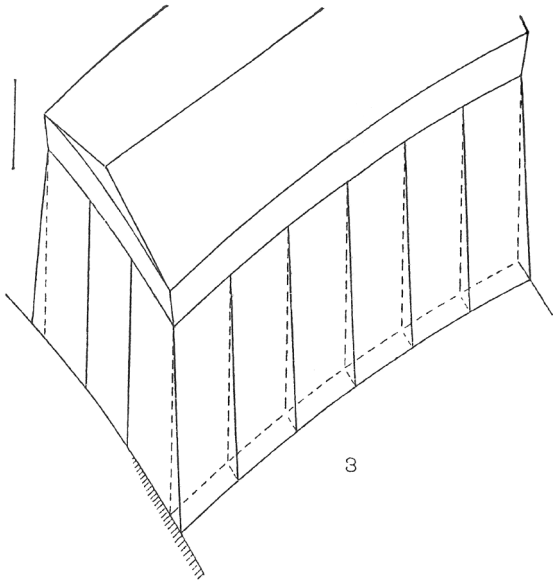

Figure 5
From Choisy 1909–10

Scamilli as thin physical blocks could well have been used to generate the curvature of the stylobate, but it is convenient to regard them also as more abstract, as numbers belonging to a system of measurement. Choisy shows how such numbers could be deployed to define a parabola, and his explanation is both simple and ingenious (he modestly attributes it to a certain Aurès). The construction is given below, but it should be noted at once that the curvature of the stylobate is indeed parabolic, in the sense that a parabola and a circle coincide to within far less than a millimeter for the Parthenon. Put another way, for the longitudinal dimensions quoted above, a circular stylobate would have a radius of 5514.6 m (where, clearly, at least the last two figures cannot have significance). If the stylobate had a parabolic profile, then the radius of curvature of the parabola would have been 5514.7 m at the crown, and at the edge 5515.3 m. Equally, a catenary

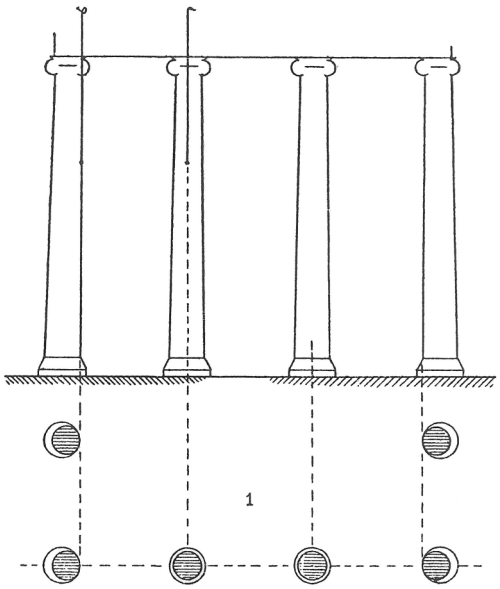

Figure 6
From Choisy 1909–10

cannot be distinguished from a circle or parabola for the tiny difference in levels of the stylobate of the Parthenon (an alternative suggestion for the layout of the stylobate is that it was defined by the inverted shape of a hanging cord, with the *scamilli* interpreted as the vertical displacements of the cord at intervals along its length).

Rowland and Howe (1999) assume the *scamilli* to be physical spacers, and their drawing, figure 7, reconstructs two ways in which the stylobate could have been constructed. To judge by the scale of the figures, the stylobate is small; if the sketch were applied to the Parthenon, then the vertical scale must be reduced by a factor of say 15. The levels were set accurately by an optical line of sight; the chorobates described by Vitruvius in VIII, 5, 1, was a possible levelling device, but the simpler traverse shown in figure 7 would have been sufficiently accurate.

The Romans achieved almost unbelievably gentle gradients in constructing aqueducts over many kilometers; a gradient of 1/1000 is common, and 1/10000 was attained. Vitruvius in VIII, 6, 1 specifies that an aqueduct should have a gradient of 1/200 (Rowland and Howe), but Choisy gives the figure as

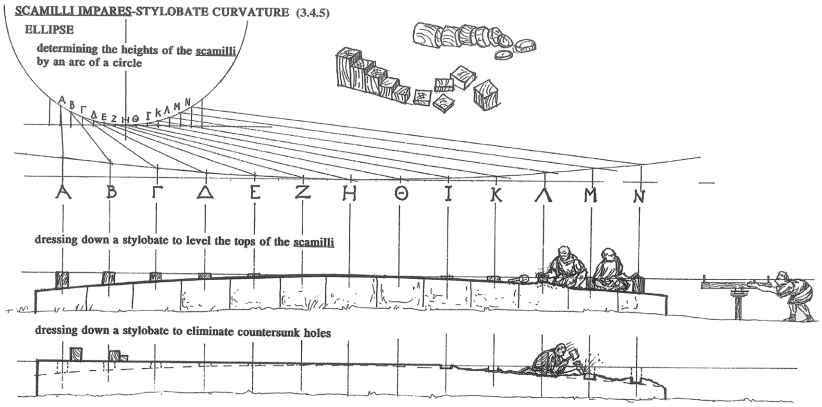

Figure 7
Dressing the stylobate (Rowland and Howe)

1/4800. Rowland and Howe comment on the difficulty of interpreting the manuscripts; *sicilicus* would give a fall of 1/4 inch in 100 ft, while *semipede* gives 1/2 ft in 100 ft. Whichever reading is correct, the Romans would have had no difficulty in laying out the Parthenon, and Roman engineering was inherited from the Greeks, who had constructed aqueducts from 700 BC. The proposal in figure 7 that a line of sight could generate an accurate curved surface is entirely justified. (Some years ago the author measured, simply and easily, the curvature of the west front of Peterborough Cathedral. At roof level, just behind the masonry, a passage runs from side to side of the church; a laser beam down the passage enabled offset readings to be taken with a graduated scale in a matter of minutes).

What follows is speculative, and indeed might be thought to be fanciful juggling with numbers. The *scamilli* are «units», either physical spacers as sketched in figure 7, or units of measurement. If they are regarded as wood or stone blocks, then, for ease of exposition, all *scamilli* will be taken to be identical, so that a given dimension can be achieved by piling *scamilli* until the required measurement is obtained. Figure 8, from Dinsmoor (after Choisy) shows how this may be done to generate a parabolic curve.

The (half) stylobate is divided into a number of equal lengths (eight in figure 8). At the first location from the apex of the intended curve, the parabola lies one *scamillus* below the horizontal. Three further *scamilli* are added to give a total depth of 4 *scamilli* below the horizontal at the second location; 5 *scamilli* are then added to give a total of 9, and so on. The vertical depth is increased progres-

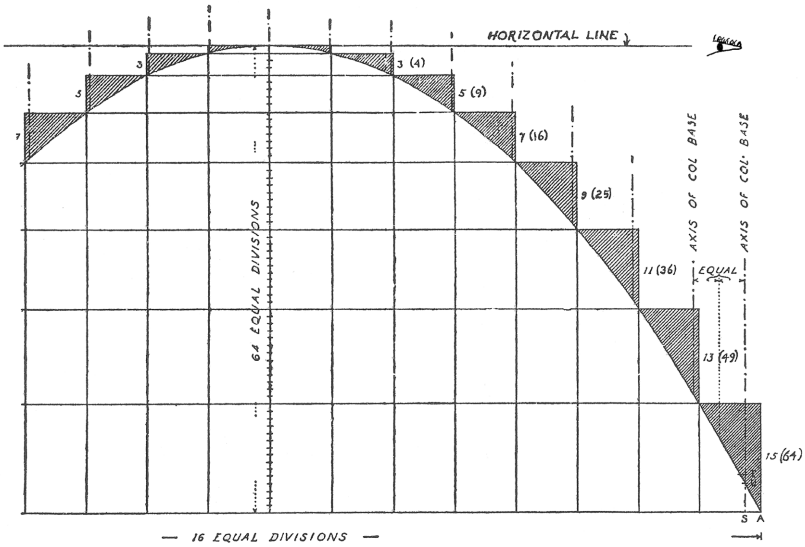

Figure 8
The parabola (Dinsmoor, after Choisy)

sively by the numbers 1, 3, 5, 7 . . . of *scamilli*. As Choisy puts it: «We will obtain a curve spaced out by unequal increments or «*scamilli*», and these increments are expressed as odd numbers 1, 3, 5, 7 . . . The meaning of *impares* is satisfied whether it is translated as odd or as unequal».

The curve of the stylobate of the Parthenon may now be fitted by the construction of figure 8, as given in the first line of Table I. The displacement of the edge of the stylobate in the long direction is 109.5 mm below the crown; if the (half) length of 34752 mm is divided into 8 equal steps, then the parabolic curve may be achieved with *scamilli* of 1.71 mm thickness (i.e. unit measurements of 1.71 mm). (All these dimensions are of course given to a ridiculous degree of accuracy).

Alternatively, if the (half) stylobate were divided into 7 equal steps, then the second line of the Table shows that *scamilli* of 2.23 mm would be relevant, and so on to the last line shown, where 4 steps would require *scamilli* of 6.84 mm.

The whole of this discussion has so far been two-dimensional, but the stylobate is of course curved in two directions; the surface is not that of a parabola (or of any other almost identical curve) but of an elliptic paraboloid (or any other almost identical surface). If the above analysis were repeated along the centre line

Number of *scamilli:*		0	1	4	9	16	25	36	49	64
Thickness:	1.71 mm	0	1.7	6.8	15.4	27.4	42.8	61.6	83.8	109.5
	2.23	0	2.2	8.9	20.1	35.8	55.9	80.4	109.5	
	3.04	0	3.0	12.2	27.4	48.7	76.0	109.5		
	4.38	0	4.4	17.5	39.4	70.1	109.5			
	6.84	0	6.8	27.4	61.6	109.5				

Table I

of the stylobate in the short direction, then the dip from centre to edge, of 60.3 mm, must be attained by a similar use of the *scamilli*. Two figures close to 60.3 are immediately evident in Table I, 61.6 in the first and last lines. Had the transverse «parabola» been laid out in 6 steps, then *scamilli* of 1.68 mm would have resulted in the required edge dip of 60.3 mm; had 3 steps been used, then the *scamilli* would have had thickness of 6.70 mm.

A very simple contour plot for (one quarter of) the stylobate of the Parthenon may therefore be constructed from the last line of Table I, as shown in figure 9. The numbers shown correspond to the piles of *scamilli* at each of the nodes, and they ensure that the longitudinal and transverse surfaces of the stylobate are both «parabolic». If each *scamillus* has thickness 6.84 mm, then the actual observed geometry of the stylobate of the Parthenon is reproduced very accurately.

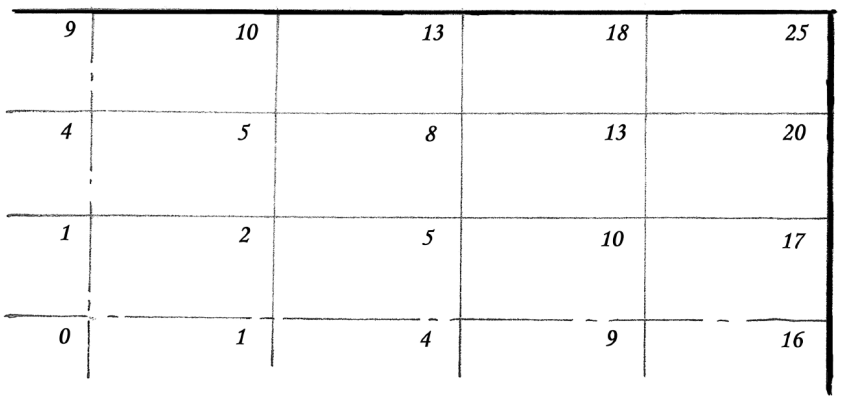

Figure 9
Depression of the stylobate; numbers of *scamilli* at each node

The great measure

The numerical arguments which lead to a basic unit dimension of 6.84 mm for a *scamillus* are supported by practical considerations. If the *scamilli* were indeed physical objects rather than unit dimensions, then a (wood or stone) spacer of 1.71 mm would seem to be too thin for use on a building site; moreover, a pile of 100 such spacers would have been needed at the corners of the stylobate of the Parthenon (cf figure 9 for *scamilli* of 6.84 mm). These two thicknesses appear, from Table I, to be the only reasonable candidates, since simple multiples give the required edge depressions of 109.5 mm and 61.6 mm in the longitudinal and transverse directions.

The numerical arguments may have been obscured by presenting measurements in metric units. A building, from at least the time of Ezekiel (6th century BC), through Vitruvius and persisting in Gothic, was laid out by means of a great measure, a physical wooden rod cut to a given length at the start of operations. The measure was subdivided into palms, fingers and so on, all these numbers being rational proportions of the whole. By the time of Vitruvius (and earlier in the Greece of the 4th century) one of the measures arrived at by subdivision was the foot. The Roman foot was fairly standard at 296 mm (cf 304.8 mm for the Imperial foot); a common measure for the Greek foot was also 296 mm, although there was wider variation (333 mm in Aegina).

Smaller measurements were obtained by smaller subdivision, still always rationally; 16 Roman digits made up one foot. The Romans also used the inch —the *uncia* was 1/12th part of a foot, that is 24.7 mm. The inch is still too coarse a unit to generate the surface of the stylobate, and smaller measures were (could only be) obtained by further rational subdivision, to 1/2 inch, 1/4 inch. The quarter inch, the *sicilicus*, was the 48th division of the foot, and it seems clear from the last line of Table I that the *scamillus* (considered as a physical object) had the thickness of one *sicilicus*; if the *scamilli* were measurements, then they were *sicilici*, used in odd and unequal increments to lay out the contours of the stylobate. The last line of Table I may be written as in Table II.

It was noted that Dinsmoor gave the differences in level of the stylobate, longitudinal and transverse, as 4 5/16 and 2 3/8 (Imperial) inches. The length of the

Number of 1/4 inch *scamilli*	0	1	4	9	16	
Depression below crown	0	1/4	1	2 1/4	4	(Greek) inches

Table II

«standard» inch of Ictinus and Callicrates is not known, but Dinsmoor's figures are very close to those of Table II.

Speculations

There is no solid evidence for the following assertions, but they do not contradict any of the facts given in this paper.

- The word *scamillus* (little stool or bench) is a (medieval) copyist's error for *sicilicus* (one quarter of an inch).
- Whether or not this is so, and whether the stylobate of the Parthenon was domed to correct a visual anomaly, or to facilitate drainage, or both, the tiny but precise deviations from a plane surface were achieved by the use of *scamilli* of basic dimension one quarter of an inch.
- Greek and Roman surveying made use of a levelling staff, and extraordinary accuracy was achieved (as witness the aqueducts). The levelling staff for the Parthenon was a rod marked in 1/4 inch steps; these *scamilli* were summed to give the contours of the stylobate by the use of *sicilici impares*.

Reference list

Callebat, L. 1973. *Vitruve, de l'architecture*, book 8, Paris: Les belles letters.

Choisy, A. 1899. *Histoire de l'architecture*. Paris: Gauthier-Villars.

Choisy, A. [1909–10] 1971. *Vitruve*. Paris: Lahure. [New edition, Paris: F. de Nobele].

Dinsmoor, W. B. [1902] 1950. *The architecture of Ancient Greece*. London: Batsford.

Gros, P. 1990. *Vitruve, de l'architecture*, book 3, Paris: Les belles lettres.

Robertson, D. S. [1929] 1943. *Greek and Roman architecture*. Cambridge: Cambridge University Press.

Rowland, I. D. and Howe, T. N. 1999. *Vitruvius, Ten books on architecture*. Cambridge: Cambridge University Press.

Sulpicius Verulanus. 1487?. *Vitruve, De architectura decem libri*. Rome: Herolt. n.d. [*Editio Princeps*].

Warren, H. L. [1914] 1960. *Vitruvius, the ten books on architecture*. New York: Dover Publications.